

Automatic hand-dryer tap All-in-One, wall

EN

Mounted on the wall

Hand-dryer tap

Ref. M095AC/AB



M095AC

Chrome-plated brass

Bright finish



M095AB

Brass

Black finish

OVERVIEW

- Automatic hand dryer tap in a tubular shape, with an optimized design specifically for All-in-One setups based on a hand dryer.
- It can operate with the GA003AC/GA003AB water tap and/or the DJ003AC/DJ004AB soap dispenser tap, or independently.
- Designed for wall mounting, it makes hand drying easier and faster for the user. Wastewater flows directly into the sink rather than onto the floor, keeping the bathroom more hygienic and clean, while preventing potential slips.

TECHNICAL DATA

Voltage	*220 – 240 V*
Frequency	*50/60 Hz*
Total power	*420 – 1.500 W*
Consumption	*3,2 – 6,4 A*
Motor power	*420 – 1.100 W*
Resistance power	*400 W (switch ON/OFF)*
Drying time	*10 – 15 s*
Rpm	*19.000 – 30.000 rpm*
Air speed	*190 – 400 km/h*
IP rating	*IPX3*

DIMENSIONS

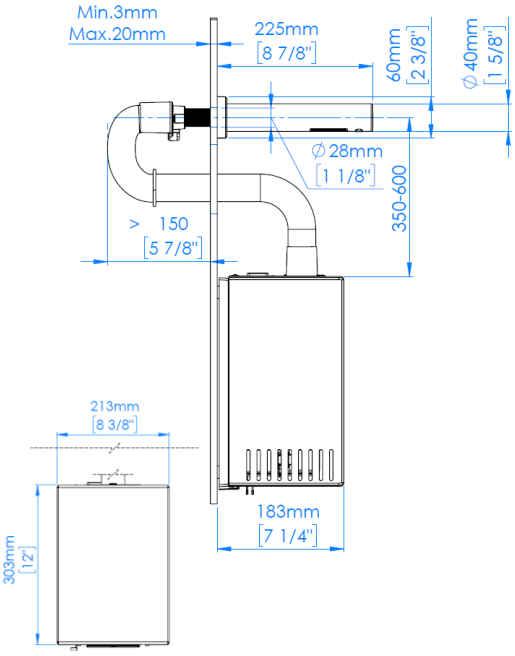

COMPONENTS AND MATERIALS

- **Automatic hand dryer:** hand dryer tap equipped with a motor and a sensor for activation.
  - High energy-efficiency motor, providing ultra-fast hand drying. Adjustable power.
  - Ideal for high-traffic areas.
  - Comes standard with a HEPA filter, significantly improving air quality.
  - Includes a built-in ionizer (Ion Hygienic® technology) that cleans and purifies the air through anion emission.
  - The hand dryer comes with a built-in Plug-in as standard.

PVD COATING AVAILABLE (consult us)



OPERATION

- Automatic operation using an infrared sensor with adjustable detection range.

Mediclinics S.A. reserves the right to make changes or modifications to the products and their specifications without prior notice.

Automatic hand-dryer tap All-in-One, wall

GUIDE SPECIFICATION

Single unit hand dryer tap, made of brass with polished chrome, black, or various PVD finishes. The automatic hand dryer tap features an infrared sensor at the bottom. The machine weighs 5.10 kg. Housing made of AISI 304 stainless steel with a satin finish and a thickness of 1.5 mm. Motor with F-class brushes, adjustable speed range between 19,000–30,000 rpm, and motor power of 420–1,100 W. Heating element with on/off switch and a power of 400 W. Operates at a frequency of 50/60 Hz and a voltage of 220–240 V, with a total power of 420–1,500 W and a current consumption of 3.2–6.4 A. Dries hands in 10–15 seconds at a speed of 190–400 km/h. Includes an optional HEPA filter and ionizer. Plug-in system option available. Compliant with current hand dryer regulations (EN 60335-1, EN 60335-2-23, EN 61000-3-2, EN 61000-3-3).

ASSEMBLY / RECOMMENDED INSTALLATION HEIGHTS

A sink that allows the installation of the All-in-One unit, as shown in the following figure, must be used:

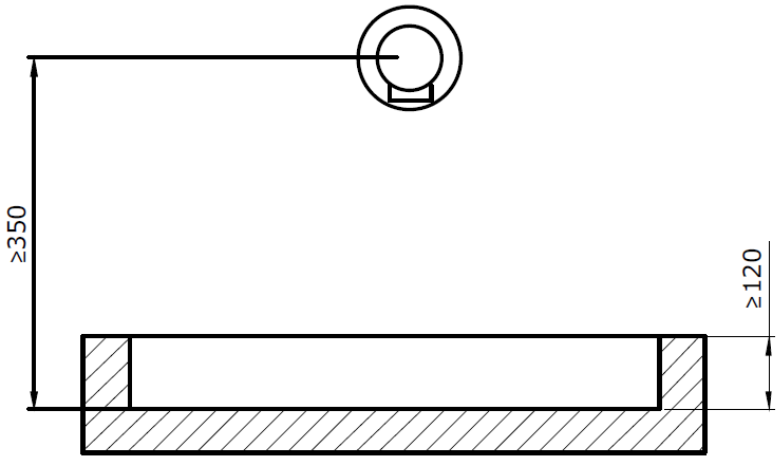

The sink must have a depth of at least 120 mm, with vertical walls and edges that are not excessively rounded to prevent splashing.

Prior to the installation of this product, adequate access shall be provided to allow maintenance operations and/or potential repairs to be carried out.

CERTIFICATIONS

Mediclinics S.A. reserves the right to make changes or modifications to the products and their specifications without prior notice.